# What's New at Great Western

Great Western Manufacturing

Separated by Excellence™

## IAOM CENTRAL, TEXOMA, & WHEAT STATE DISTRICTS

KATHY WILEY

# Introduction to Great Western & our history.

Great Western has an extensive history of product innovation.

1858 – Founded as Great Western Foundry & Machine Shop

1880's – Acquires designs for milling equipment

1886 – Becomes Great Western Manufacturing

1945 – WWII ends with decreased Demand for milling equipment

1947 – The HS Free Swinging Sifter is developed

1960 – The Box Type Tru-Balance Sifter is developed

1971 – The Workstation Sampl-Sifter is developed

1984 – The Stainless-Steel Gravity Flow Sifter, The Tru-Balance Modular Sifter, & the GW Original Agitator are developed

1992 – The In-Line Tru-Balance Sifter is developed

1995 – Pneumatic Sieve Compression modernizes GW sifters

2001 – The NOVA sieve is developed predominately to increase mill capacity

2002 – The GyroSifter is developed

2005 – The QA Series In-Line Sifter is developed

2009 – The QA Series Gravity Flow Sifter is developed

2012 – The QA Series Mobile Sifter provides portable quality control

2019 – The Summit Sieve is developed to improve sifting performance

2019 – The EB Series Agitator/Blender is developed

2019 – Great Western & Gazel Makina Alliance provides metal frame free swinging sifters to the Americas

2021 – Great Western & Uğur Makina Alliance expands product offering to include milling machinery.
Great Western Introduces Spouting to our portfolio

**Mission Statement: We will lead as the premier manufacturer of commercial equipment for dry sifting applications in food processing & custom industrial applications.**

# Sales Team

Great Western Manufacturing
Separated by Excellence™


David Schroeder


Paul Van Camp


Jeff Seeger


Kathy Wiley


Brooke Dessert


Abraham Cilliers


Cassey Bullock

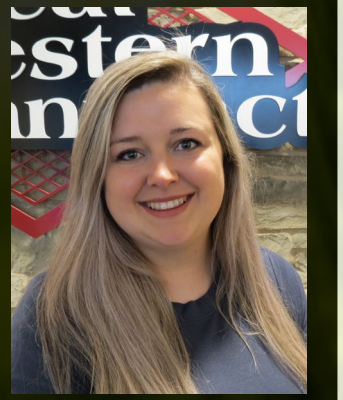
Brooke Wagner

In 2020 Great Western developed the Flow Rita program to educate and develop our team members to better support our customers by answering their biggest questions on sifting.

Here are a few customers we serve

- Cereal Processing
- Mix Plants
- Bakeries
- Spice Industry
- Confectionery
- Dried Dairy Products
- Pet Foods
- Plastics
- Chemicals
- Minerals

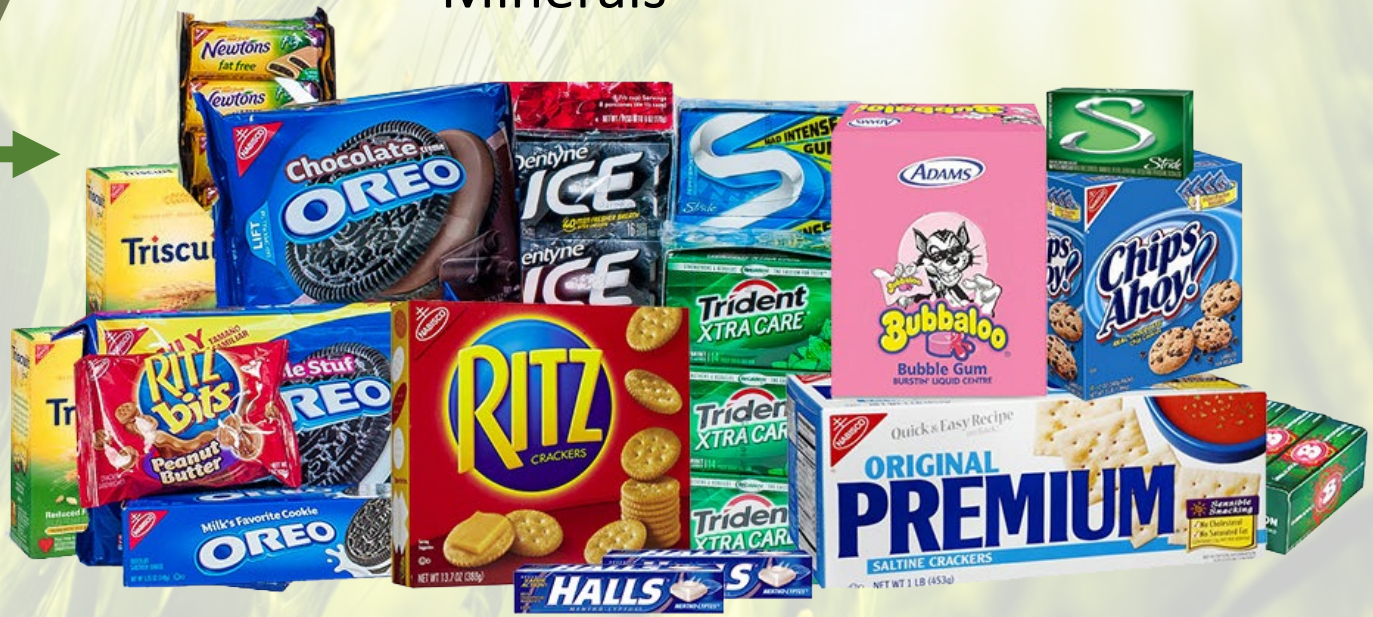

# QUESTION TIME!

Q: What do you think our customers inquire about most often?

Raise your hand and play along!

A: What is the maximum capacity I can get through my sifter?

# How to determine Sifter Capacity

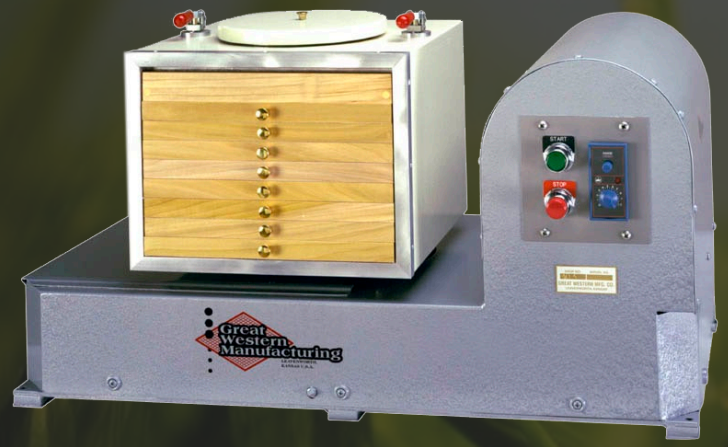


- 8 lb samples tested at fixed intervals of time in our Sampl-Sifter
- Full line of testing sieves with screen apertures to test all product/sifter specifications
- Allows us the ability to match the speed & circle of the proposed sifter (ie: 262 RPM @ Ø2-5/8” or 233 RPM @ Ø3-1/2”)

# How to determine Sifter Capacity

Take sample test data and put it into Curve Fitting
(non-linear regression analysis data program)

| Total time in seconds | % of thrus |
|---|---|
| 1.5 | 10.6 |
| 3 | 23.6 |
| 6 | 51.8 |
| 9 | 73.3 |
| 12 | 88.7 |
| 15 | 95.1 |
| 18 | 96.8 |
| 21 | 97.6 |
| 24 | 98.4 |
| 27 | 99 |
| 30 | 99.3 |
| 33 | 99.3 |

# How to determine Sifter Capacity

Take sample test data and put it into Curve Fitting
(non-linear regression analysis data program)

## Coefficient Data

a. = 9.88760327250E+001 } 98.876% could go through the test screen

b. = 9.47686606125E+001
c. = 3.79460591570E-002
d. = 1.62439250020E+000
} Factors

# Model results

**Data points plotted*

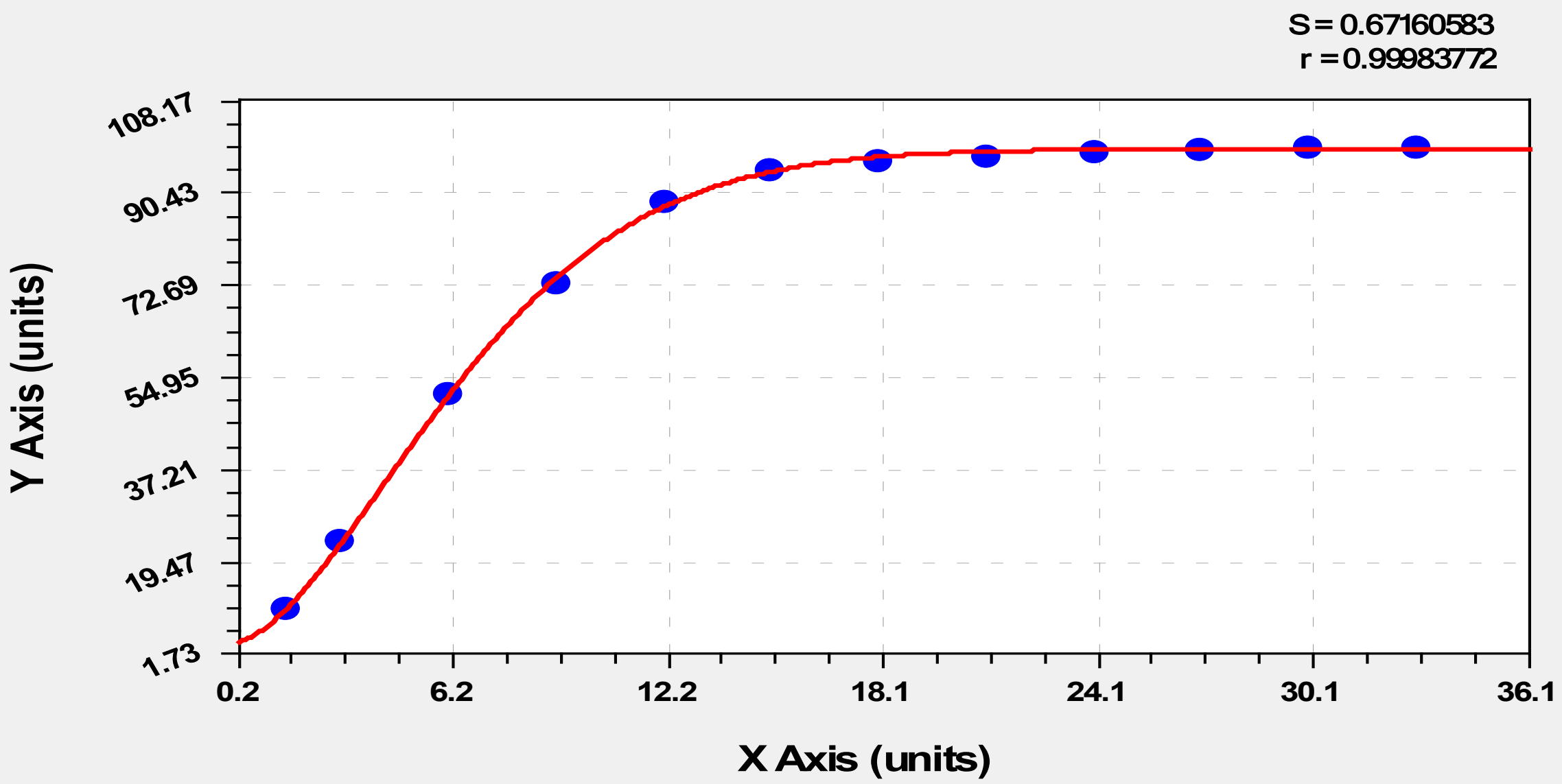

# Sieve Depth Calculation Worksheet

Great Western Manufacturing
Separated by Excellence™

| Product | | | Sieve | Depth | | Load On | Load Off | % Over | % Thru | Eff | Error | SqFt/Cwt |
|---|---|---|---|---|---|---|---|---|---|---|---|---|
| **Feed Rate (#/hr)** | = | 50000 | Top Space | 12.14 | | 50000 | 38916 | 77.8% | 22.2% | | | |
| **Thru Put (%)** | = | 98.9 | | | | | | | | | | |
| **Density (#/cu ft)** | = | 26.54 | | 15.72 | 1 | 50000 | 38916 | 77.8% | 22.2% | 22.4% | 98.6% | 0.01 |
| **Sifter** | | | 1 | 12.69 | 2 | 38916 | 25258 | 50.5% | 49.5% | 50.0% | 97.8% | 0.02 |
| **Speed (rpm)** | = | 262 | 2 | 8.96 | 3 | 25258 | 14017 | 28.0% | 72.0% | 72.8% | 96.0% | 0.03 |
| **Throw (in)** | = | 2.625 | 3 | 5.89 | 4 | 14017 | 6920 | 13.8% | 86.2% | 87.1% | 91.9% | 0.04 |
| **Sieve** | | | 4 | 3.96 | 5 | 6920 | 3206 | 6.4% | 93.6% | 94.7% | 82.5% | 0.05 |
| **Cloth Width (in)** | = | 28.9 | 5 | 2.94 | 6 | 3206 | 1540 | 3.1% | 96.9% | 98.0% | 63.5% | 0.06 |
| **Tray Thickness (in)** | = | 1.13 | 6 | 2.49 | 7 | 1540 | 886 | 1.8% | 98.2% | 99.3% | 36.6% | 0.07 |
| **Side Opening (in)** | = | 1.25 | 7 | 2.31 | 8 | 886 | 659 | 1.3% | 98.7% | 99.8% | 14.7% | 0.08 |
| **Factors** | | | 8 | 2.25 | 9 | 659 | 588 | 1.2% | 98.8% | 99.9% | 4.5% | 0.09 |
| **Friction** | = | 0.8 | 9 | 2.23 | 10 | 588 | 568 | 1.1% | 98.9% | #### | 1.1% | 0.10 |
| **Sifter Sieve Area (Sq Ft)** | = | 5.00 | 10 | 2.22 | 11 | 568 | 563 | 1.1% | 98.9% | #### | 0.3% | 0.11 |
| **Sample Size** | = | 8.00000 | 11 | 2.22 | 12 | 563 | 562 | 1.1% | 98.9% | #### | 0.1% | 0.12 |
| **a** | = | 98.876 | 12 | 2.22 | 13 | 562 | 562 | 1.1% | 98.9% | #### | 0.0% | 0.13 |
| **b** | = | 94.7687 | 13 | 2.22 | 14 | 562 | 562 | 1.1% | 98.9% | #### | 0.0% | 0.14 |
| **c** | = | 0.03794 | 14 | 2.22 | 15 | 562 | 562 | 1.1% | 98.9% | #### | 0.0% | 0.15 |
| **d** | = | 1.624 | 15 | 2.22 | 16 | 562 | 562 | 1.1% | 98.9% | #### | 0.0% | 0.16 |

# Sieve Depth Calculation Worksheet

Great Western Manufacturing
Separated by Excellence™

| Product | | | Sieve | Depth |
|---|---|---|---|---|
| Feed Rate (#/hr) | = | 25000 | Top Space | 5.14 |
| Thru Put (%) | = | 98.9 | | |
| Density (#/cu ft) | = | 26.54 | | 8.89 |
| Sifter | | | 1 | 5.51 |
| Speed (rpm) | = | 262 | 2 | 3.01 |
| Throw (in) | = | 2.625 | 3 | 2.28 |
| Sieve | | | 4 | 2.16 |
| Cloth Width (in) | = | 28.9 | 5 | 2.15 |
| Tray Thickness (in) | = | 1.13 | 6 | 2.14 |
| Side Opening (in) | = | 1.25 | 7 | 2.14 |
| Factors | | | 8 | 2.14 |
| Friction | = | 0.8 | 9 | 2.14 |
| Sifter Sieve Area (Sq Ft) | = | 5 | 10 | 2.14 |
| Sample Size | = | 8 | 11 | 2.14 |
| a | = | 98.876 | 12 | 2.14 |
| b | = | 94.7687 | 13 | 2.14 |
| c | = | 0.03794 | 14 | 2.14 |
| d | = | 1.624 | 15 | 2.14 |

| Product | | | Sieve | Depth |
|---|---|---|---|---|
| Feed Rate (#/hr) | = | 30000 | Top Space | 6.53 |
| Thru Put (%) | = | 98.9 | | |
| Density (#/cu ft) | = | 26.54 | | 10.26 |
| Sifter | | | 1 | 6.94 |
| Speed (rpm) | = | 262 | 2 | 3.9 |
| Throw (in) | = | 2.625 | 3 | 2.59 |
| Sieve | | | 4 | 2.24 |
| Cloth Width (in) | = | 28.9 | 5 | 2.17 |
| Tray Thickness (in) | = | 1.13 | 6 | 2.16 |
| Side Opening (in) | = | 1.25 | 7 | 2.16 |
| Factors | | | 8 | 2.16 |
| Friction | = | 0.8 | 9 | 2.16 |
| Sifter Sieve Area (Sq Ft) | = | 5 | 10 | 2.16 |
| Sample Size | = | 8 | 11 | 2.16 |
| a | = | 98.876 | 12 | 2.16 |
| b | = | 94.7687 | 13 | 2.16 |
| c | = | 0.03794 | 14 | 2.16 |
| d | = | 1.624 | 15 | 2.16 |

| TRU-BALANCE SIFTER<br>INTERNAL FLOW SCHEME<br>30 7/8" SQ. SIEVES | CUSTOMER<br>Flow Rita | SHOP NO: –<br>MODEL NO: 221<br>SO NO: – |
|---|---|---|

LOOKING AT RIGHT SIDE

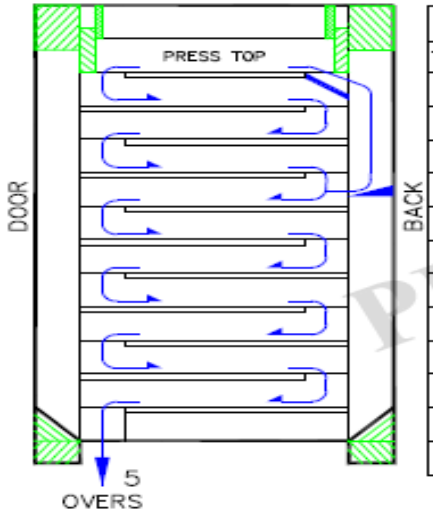


P/N 480-245-____

| NO | STYLE | P/N | SCREEN | DEPTH |
|---|---|---|---|---|
| TOP | ADAD | 223-252-170 | | 3-3/4 |
| 1 | DXAX | C5B | 6-600/51 | 6 |
| 2 | AXAX | 776 | 6-600/51 | 4 |
| 3 | N | 003 | 6-600/51 | 3 |
| 4 | AAMA | 66B | 6-600/51 | 6 |
| 5 | AXAX | 66B | 6-600/51 | 6 |
| 6 | AXAX | 666 | 6-600/51 | 4 |
| 7 | N | 003 | 6-600/51 | 3 |
| 8 | N | 003 | 6-600/51 | 3 |
| 9 | N | 003 | 6-600/51 | 3 |
| 10 | N | 003 | 6-600/51 | 3 |
| 11 | N | 0084B | 6-600/51 | 5-1/4 |
| | TOTAL= | | | 46.25 |

LOOKING AT DOOR

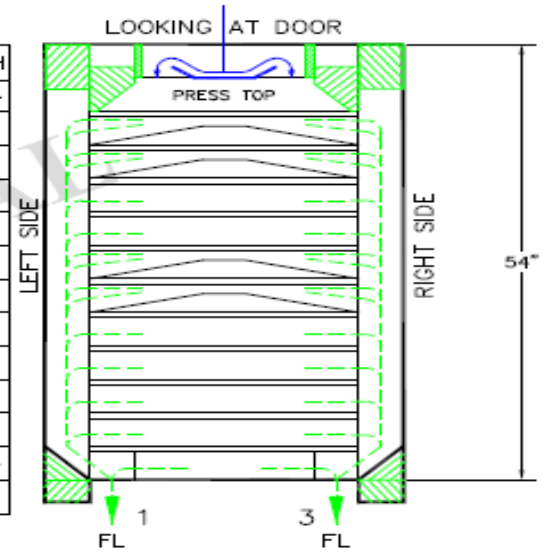




CUSTOMER REVIEW:

| | |
|---|---|
| Approved | Date |
| Approved As Noted | Date |
| Disapproved | Date |

TRAY

| | |
|---|---|
| STYLE | Nova Aluminum |
| COMPT LINER | None |
| PITCH | None |
| BACKWIRE | 1-2 & 5-6: Perforated (Welded)<br>3-4 & 7-11: None |
| SCREENS | Glued-On |
| SCREEN CLEANERS | Buhler Knobbed |
| NO PER COMPT | 1 |
| SCREEN SIZE | 34"X32"<br>No Edge |

PAN

PAN TYPE S.S.

CONSTRUCTION

HDPE Food Grade Plastic
Pan To Sieve: 3M Clear Double Stick Tape
Gasketing Sieve To Sieve: Felt

BOX

BOX INTERIOR: Satin Stainless HWL
DOOR RIBS: Satin Stainless HWL
BOTTOM BOARDS: Satin Stainless HWL
BOX EXTERIOR: Laquer
INLET DEFLECTOR: Dish
PVC FOOD GRADE PLASTIC PNEUMATIC PRESS-TOP & SEALS
INLET THIMBLE
VIBRATION SWITCH
FRONT HINGE GUARDS w/PNEUMATIC SWITCHES
REAR & SIDE GUARDS

Ø8" TO Ø8"
INLET

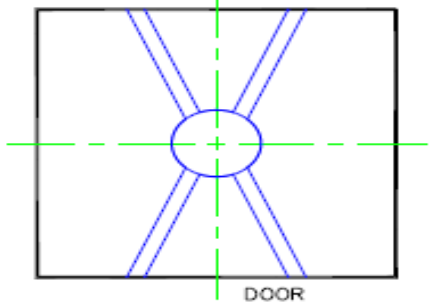


TOP PLAN

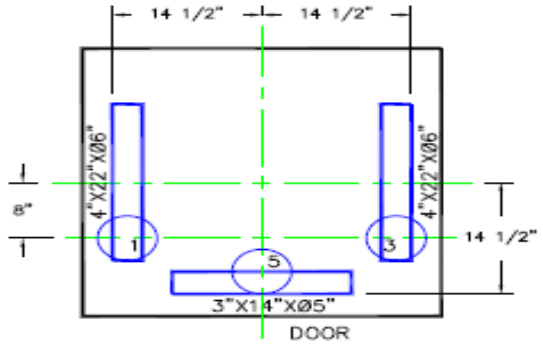


BOTTOM PLAN

CAPACITY: 500CWT SOFT WHEAT

46.27 (-0/+0.25)

| DOOR | CIRCLE: 2 5/8" | SIDE OPENINGS: | INLET SOCK | OUTLET SOCKS | REV: | DATE: |
|---|---|---|---|---|---|---|

# How to determine Sifter Capacity

Other factors to consider…

## …Inlet & Outlet sizes

Maximum output per outlet (or inlet)
30 lb/ft³/min/in²

| Ø | lb/hr |
|---|---|
| 4” | 7,200 |
| 5” | 20,000 |
| 6” | 38,200 |
| 7” | 60,300 |
| 8” | 84,500 |
| 10” | 136,200 |

# Conclusion...

## Factors affecting Capacity and Flow Design

- Screen area requirements
- Sifting efficiency requirements
- Sieve depth requirements for volumetric capacity
- Inlet/outlet sizes
- Sieve constraints/type of sieves

# What questions do you have for us?

Great Western Manufacturing
Separated by Excellence™

## Thank you!

Website: gwmfg.com
Email: sifter@gwmfg.com
Socials: @GreatWesternMfg