imas
INTEGRATED MACHINERY SYSTEMS

5th Annual
October 12-14, 2014
IAOM Southeast Asia Conference & Expo
Sunway Resort & Spa | Kuala Lumpur, Malaysia

MSP Supersense Purifier Presentation

by

Muhammed Uzun
Marketing Manager

Milleral
INTEGRATED MILLING SYSTEMS

13.10.2014


Milleral

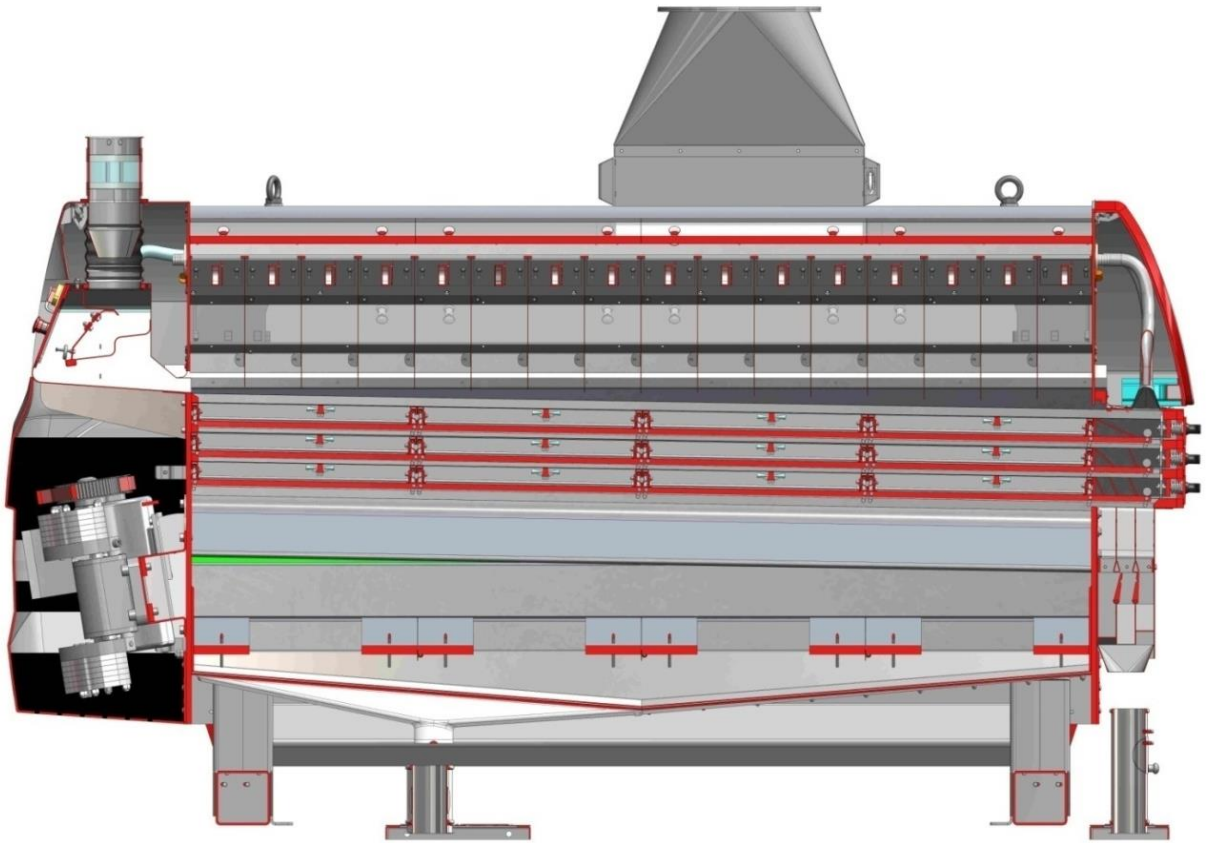

Cross-Section View.

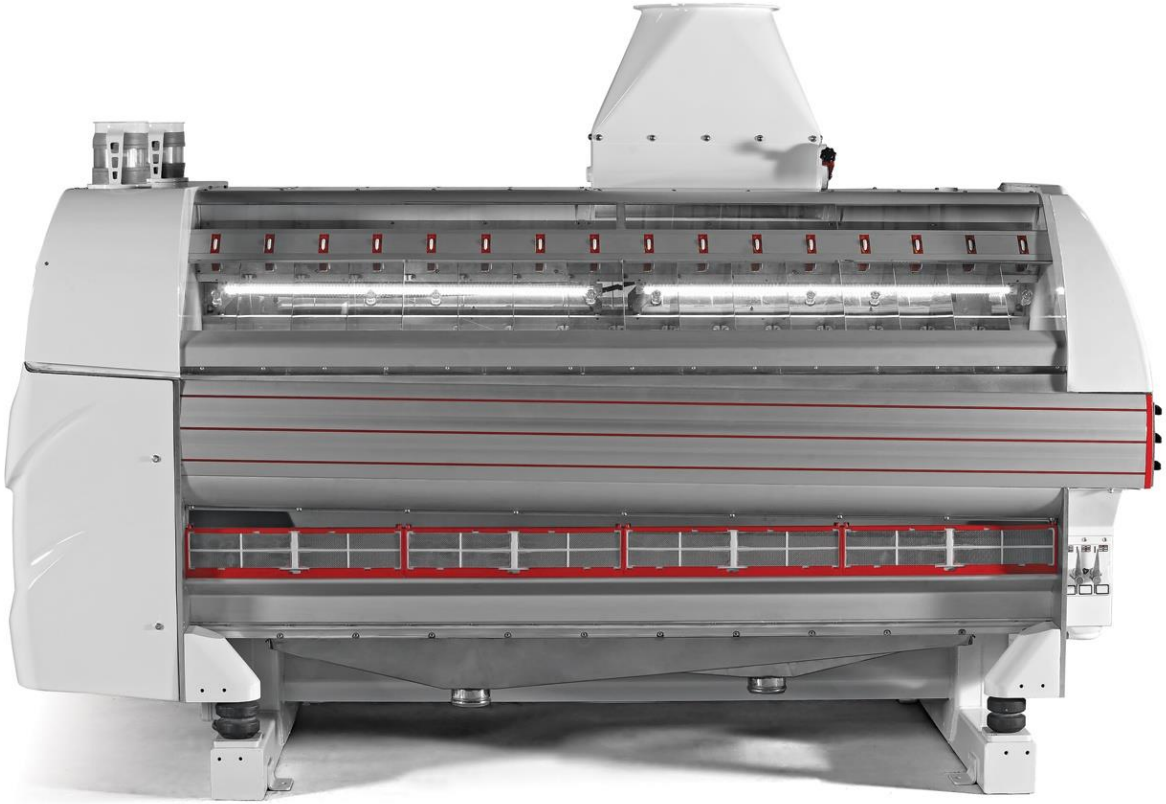

High-resistant, light aluminum frame construction, conforming to food regulatory standards.

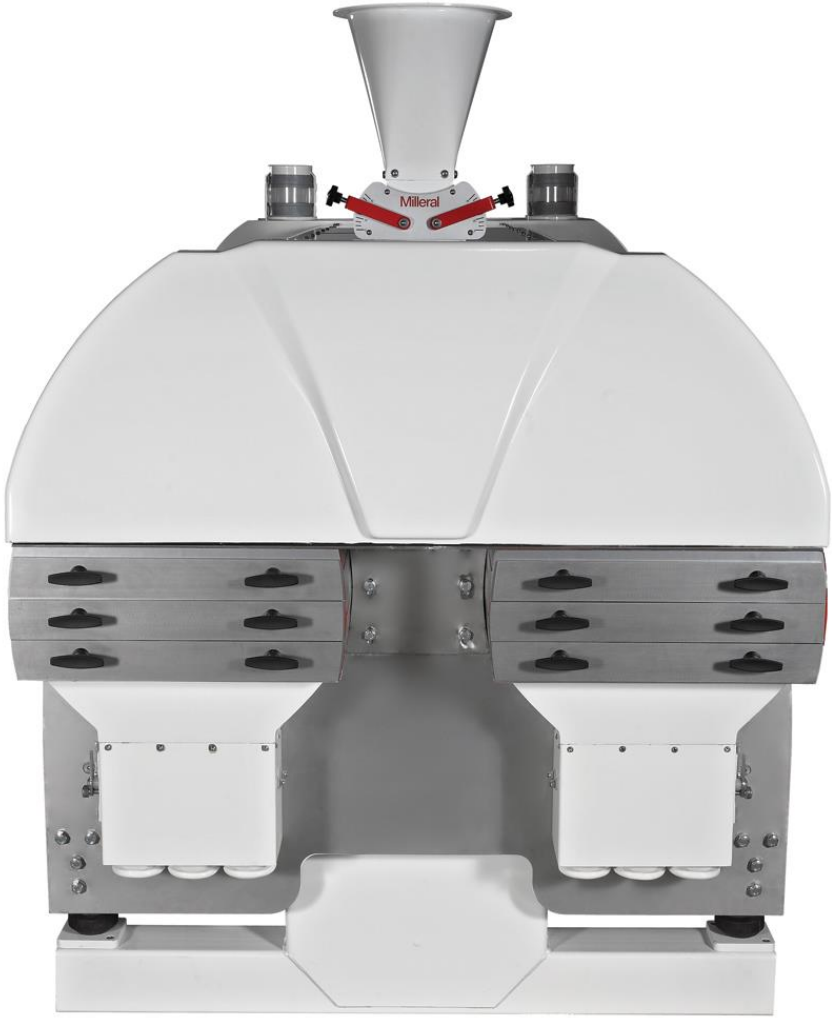

Innovative, unique design.

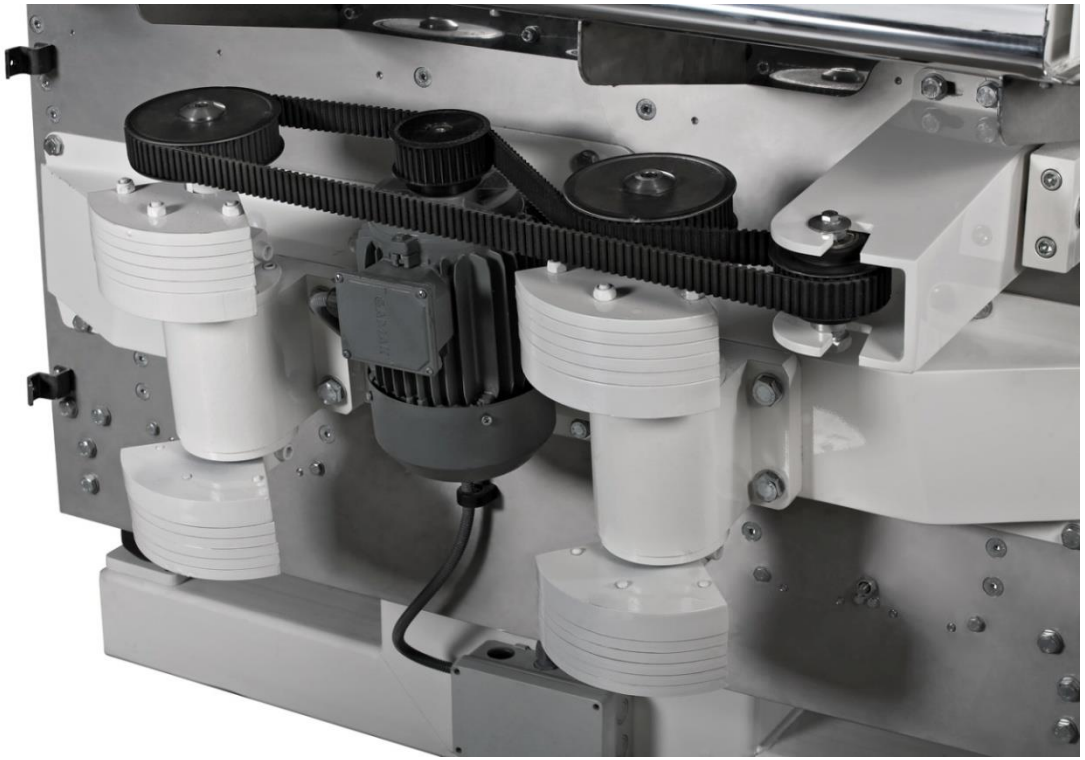

An innovative single-motor drive system is used to avoid unbalanced movement at start and stop. This also results in uniform vibration to all parts of the machine during operation.

Nylon sieves are easily changeable using easily mountable aluminum frames.

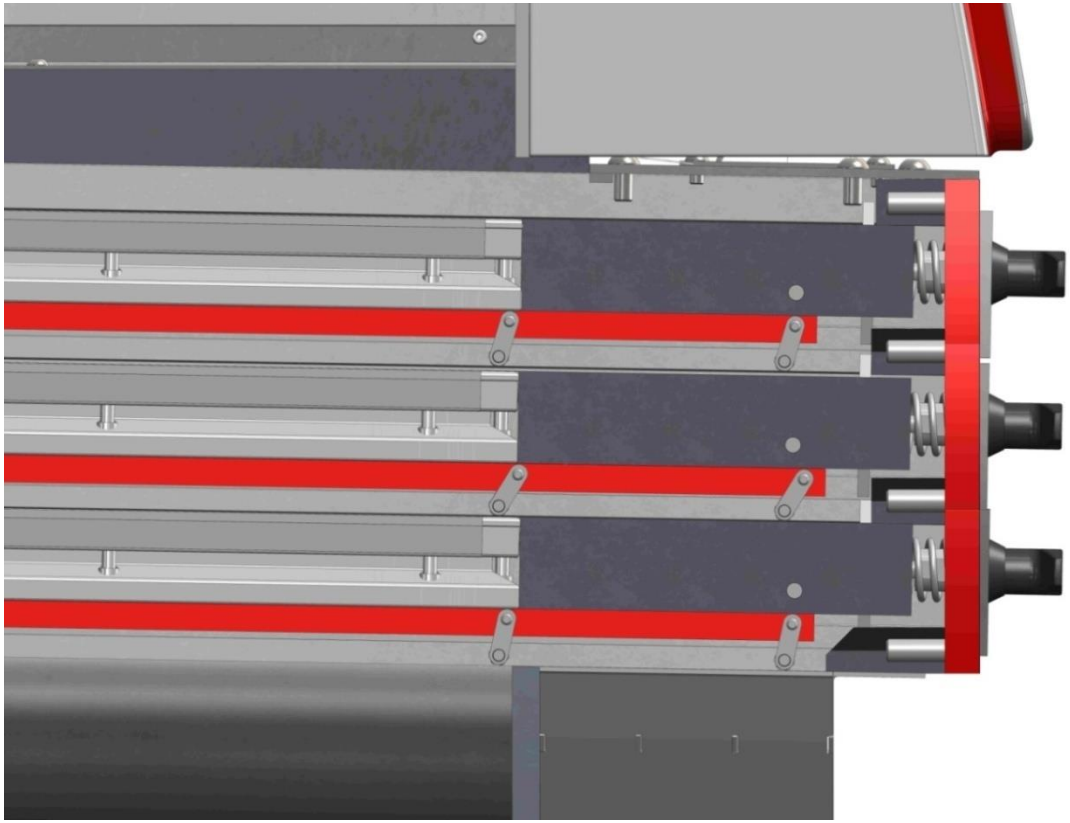

A PATENTED frame locking mechanism prevents product leakage.

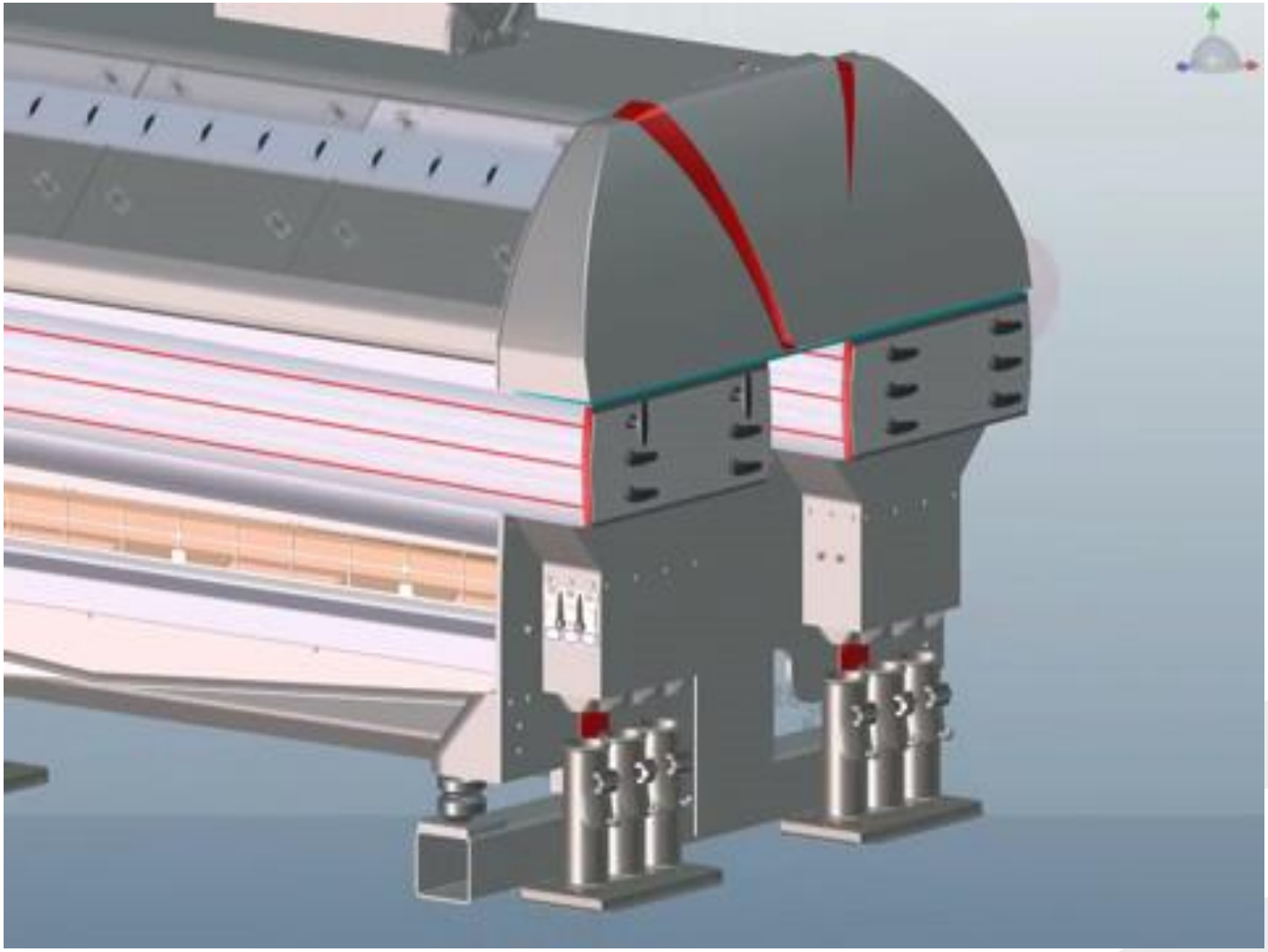

Special nylon tensioning system on the sieve screens:

Screens are tightened by using below screws.

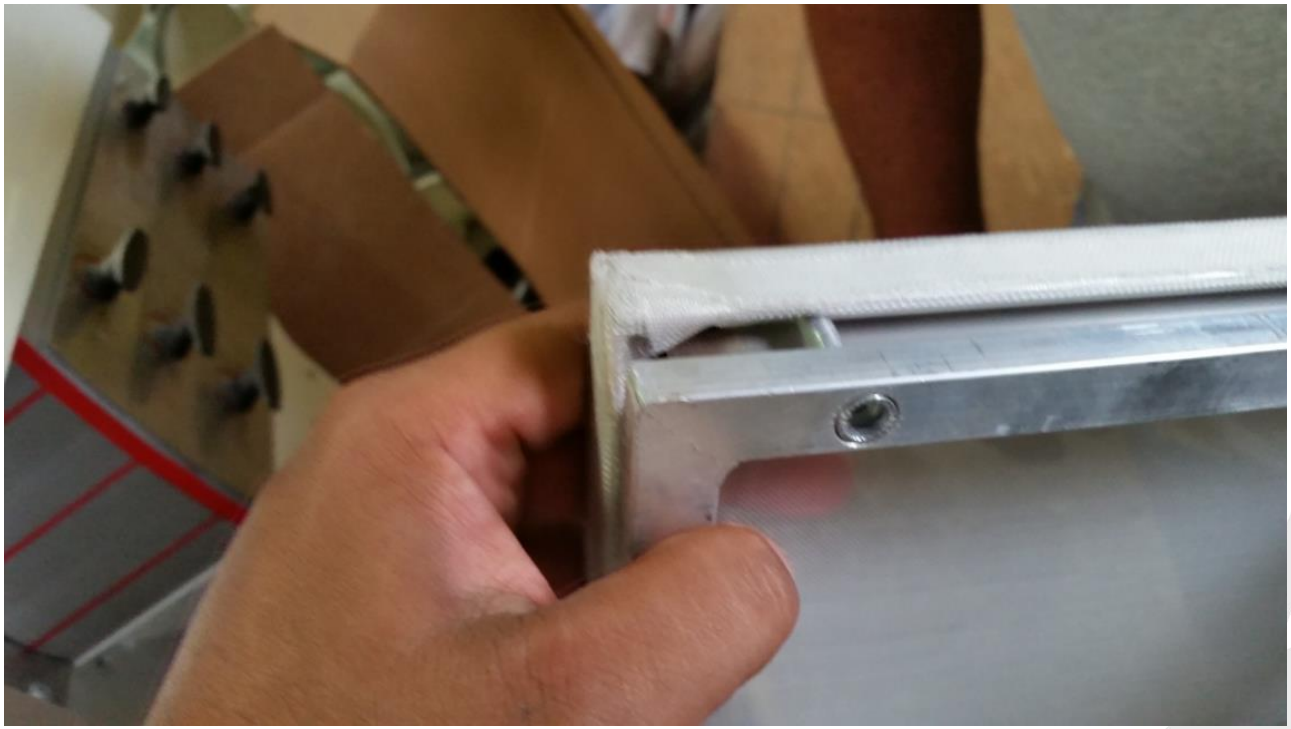

A weight adjusted feeding valve assures homogeneous stock distribution.

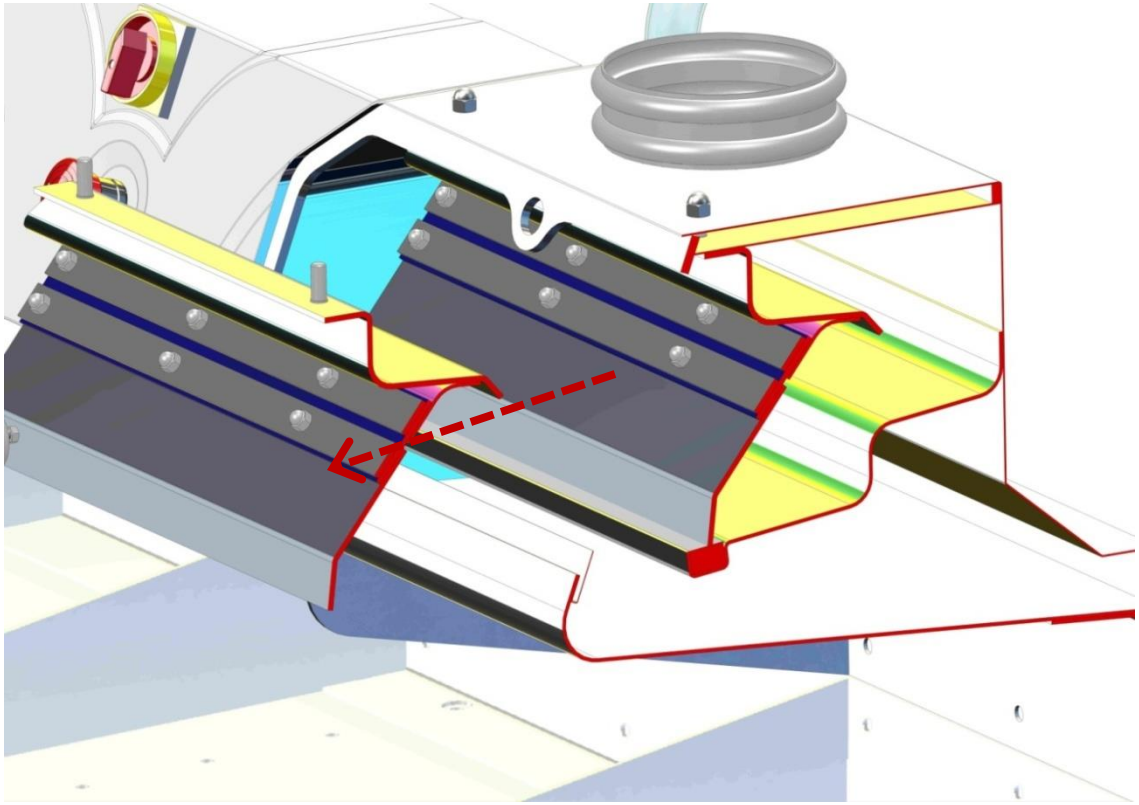

Easy to clean feeding box.

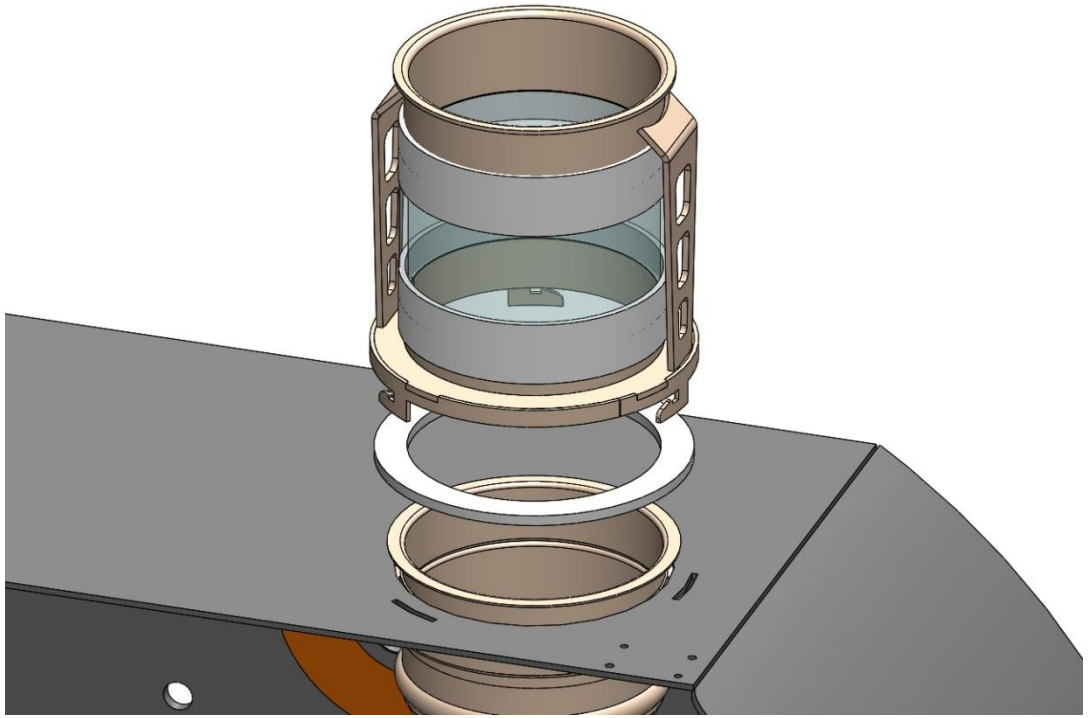

Easy to remove product inlet glass.

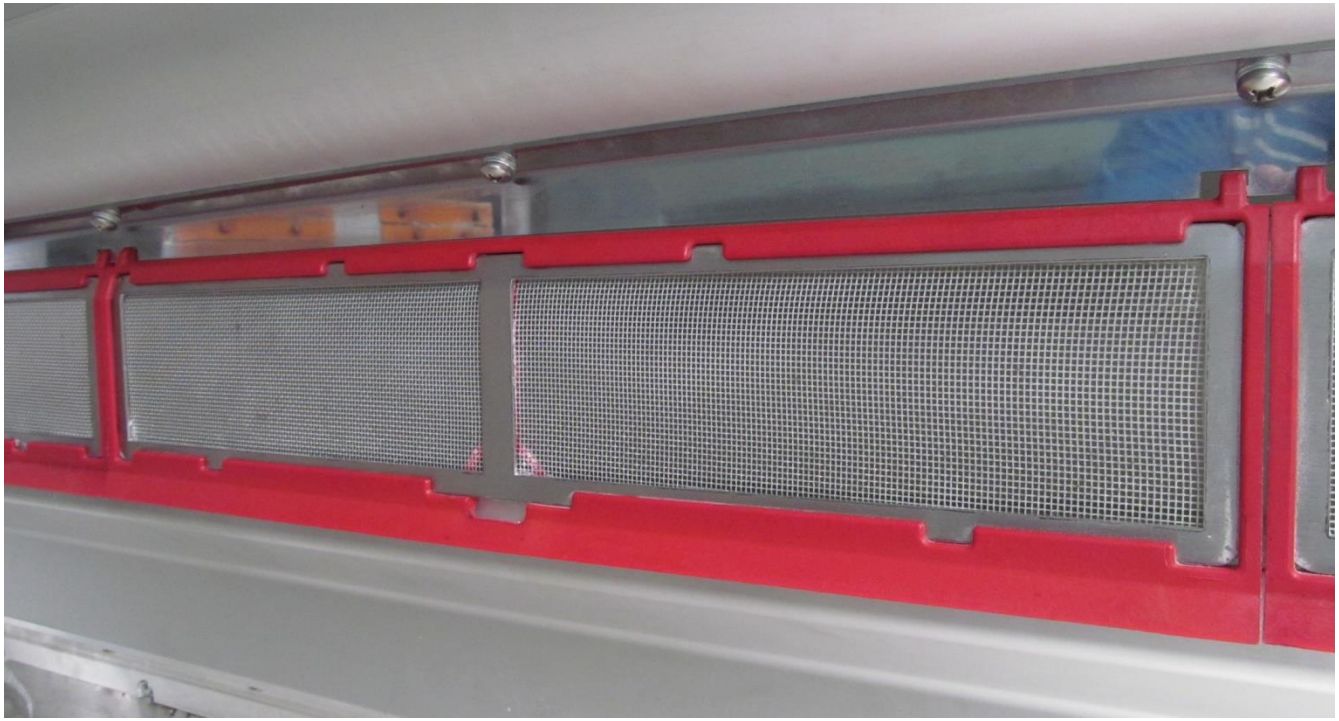

Specially designed air-permeable cloth product check points are used on the machine. This also protects the interior from outside contamination.

Product flow check glasses are double sided. This allows them to be easily reversed and cleaned during operation .

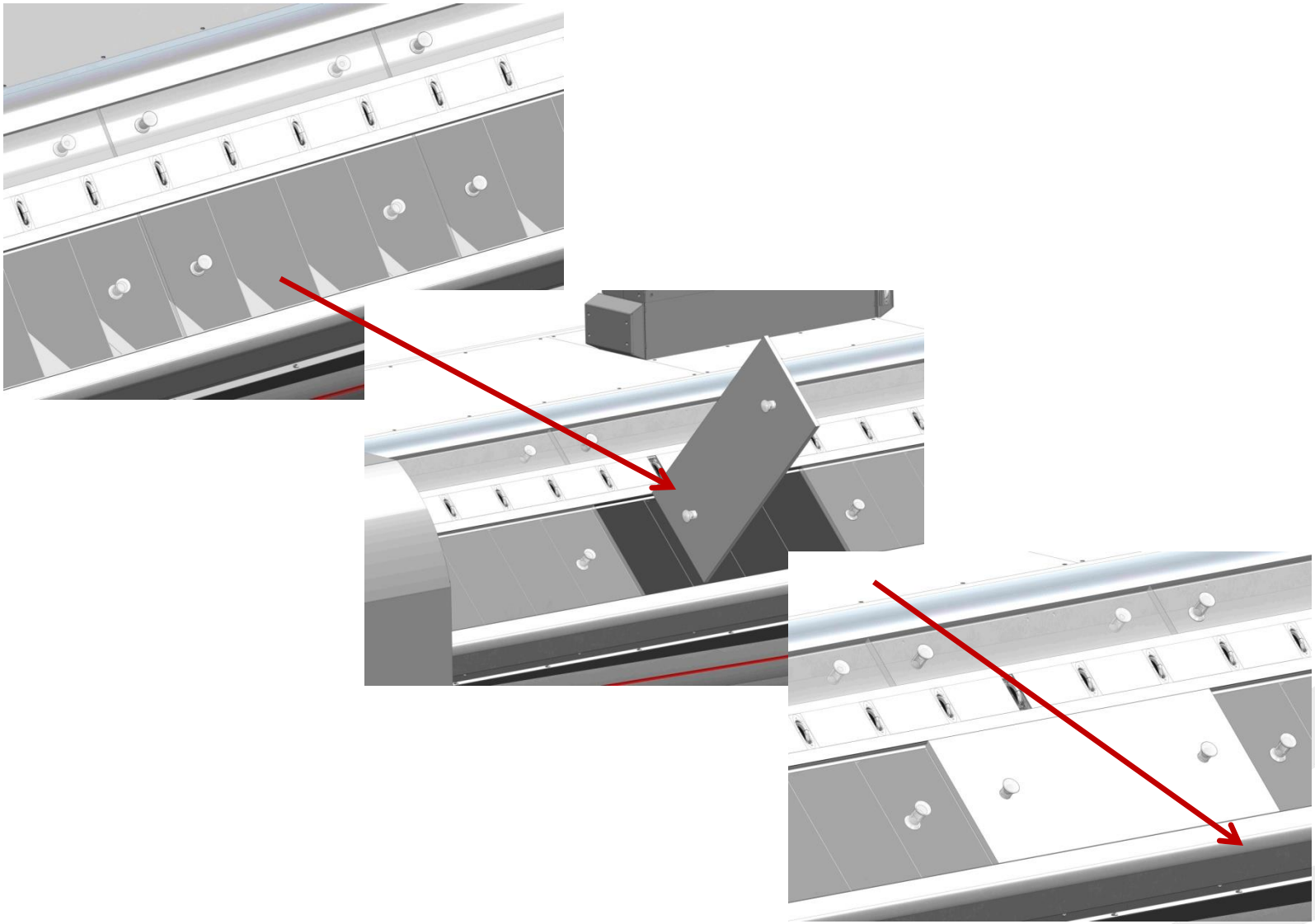

Product flow check glasses are double sided.

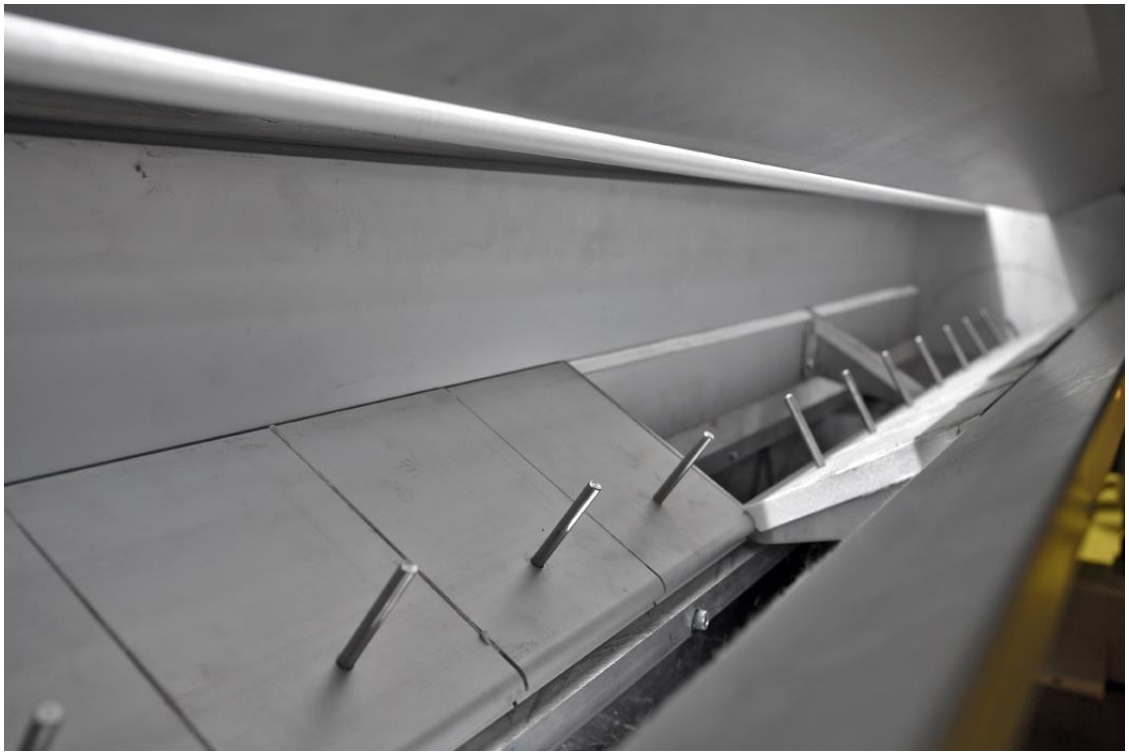

Product diverting valves, placed on the output tray, are designed to avoid product accumulation.

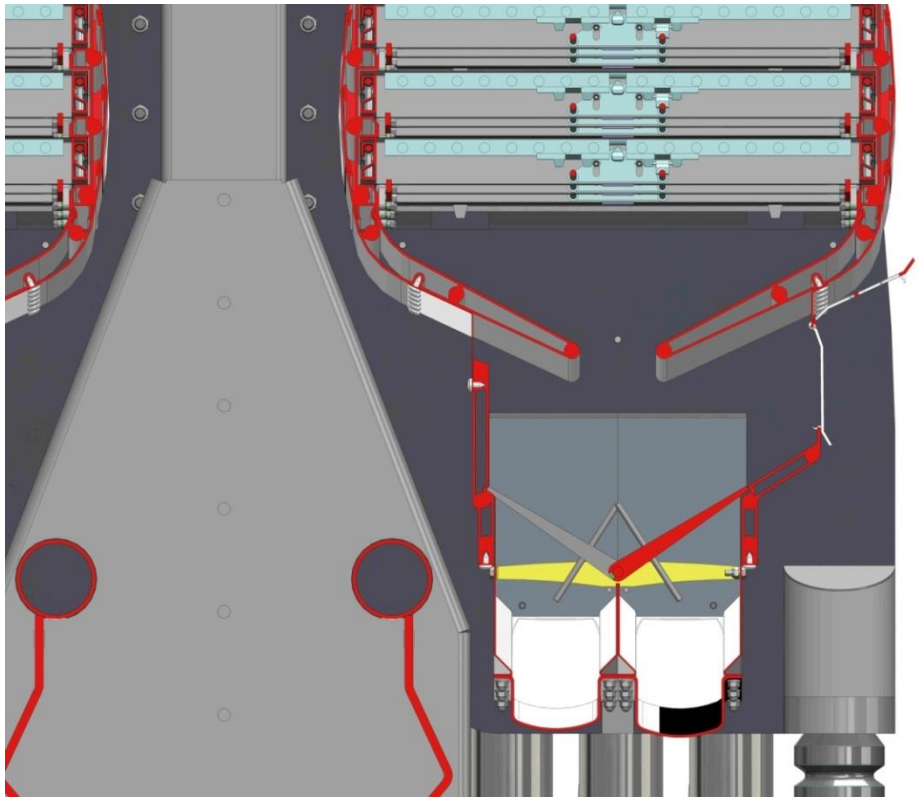

Side cross section of the diverting valves.

High quality durable brushes assure that all sections of the sieve are cleaned during operation.

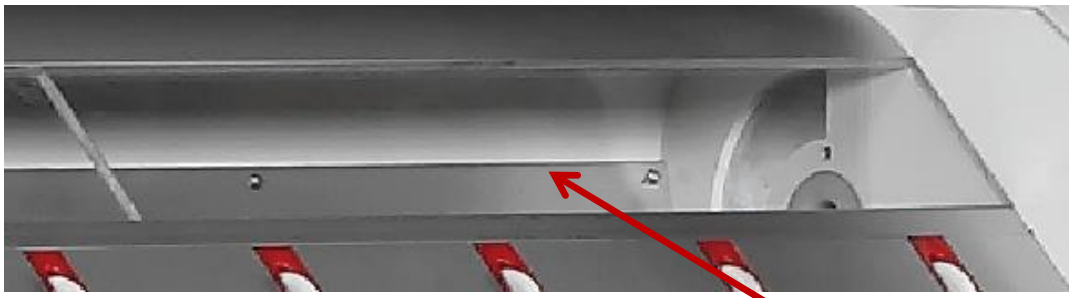

The easy to clean, dust-proof circular aspiration channel is maintenance friendly and features transparent check covers.

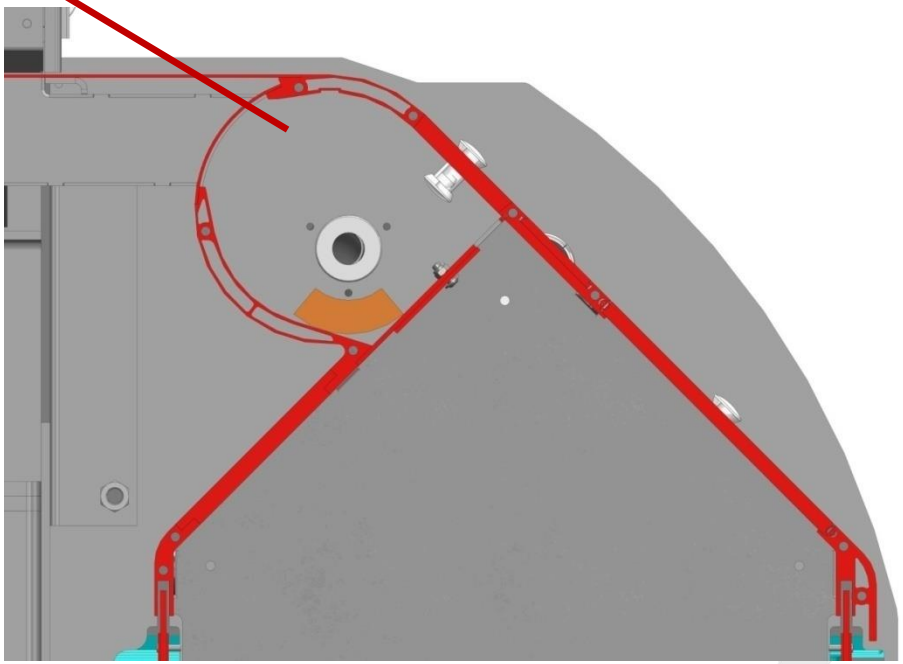

As a grill system is not used, losses due to friction are minimized.

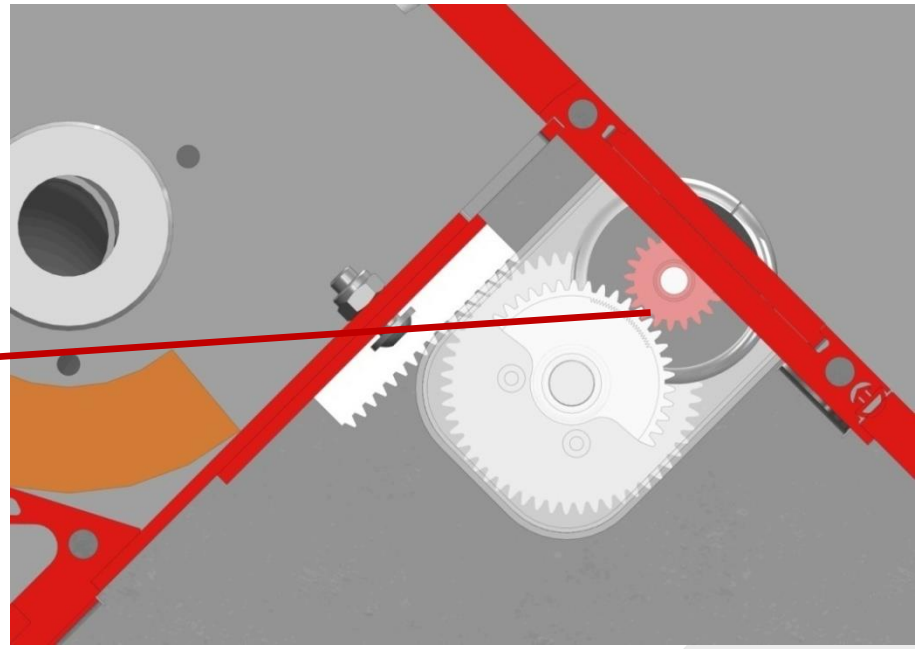

Air regulation valves with a PATENTED gear mechanism make sensitive regional aspiration easy to manage. The same pressure and flow at each section are easily achieved.

Aspiration is provided in the inlet and outlet boxes to avoid dust.

Product outlet valves are user-friendly and avoid product accumulation.

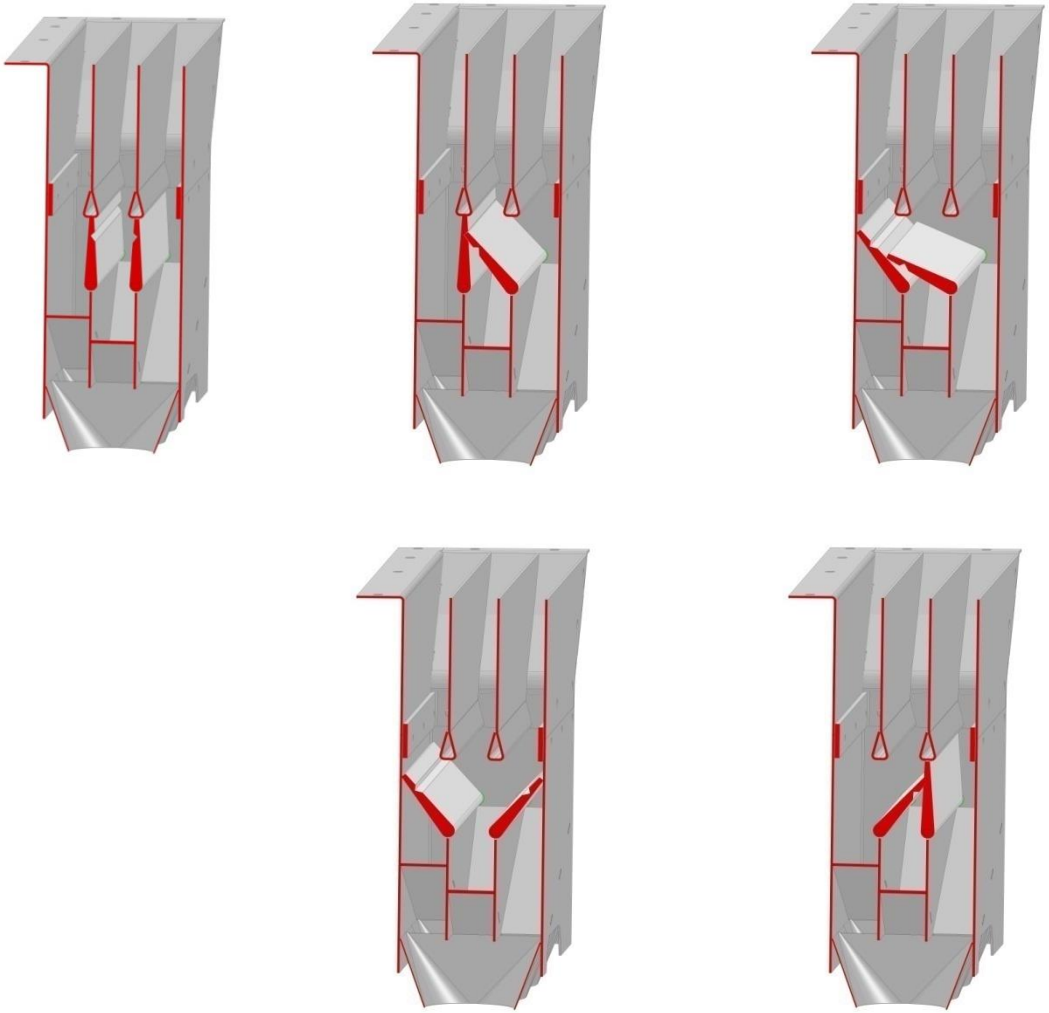

Diverter positions provide various combinations to meet your mill's specific needs.

Easy to use double-latch sieve frame locks.

LED lightening for energy savings and bright visible observation.

Efficiency Analysis:

This analysis is based on the comparative data gathered at the Selva Semolina Mill at S7-S8 passages. The first purifier is a classical style and the second one is the Supersense.

imas INTEGRATED MACHINERY SYSTEMS

WORKING CONDITIONS

- ✓ Milling flow: 7100 kg/h
- ✓ Purifier Passage Flow: 1000 kg/h (Tolerance: 100 kg/h)
- ✓ Semolina Granulation: 450-475 microns (Sieve through)
- ✓ Dampening water: 16%
- ✓ Particle hardness: 75%
- ✓ The tests were made with different vibration angles but the results are given according to optimum angles.

Diagram

S7	Red1			
450	475	500	530	B4F
425	450	475	500	D2
425	450	450	475	D1

SEMOLINA D1

S8	Red2			
450	475	500	530	B4F
425	450	475	500	D4
425	450	475	500	D3

SEMOLINA D2

RESULTS

PARAMETER	CLASSIC PURIFIER	SUPERSENSE	CHANGE (%)
Average Feeding (kg/h)	1,001	864	
Average Semolina Extraction (%)	51	60	17.65
Average Total Ash (%)	1.07	0.93	-13.50
Average Semolina Ash (%)	0.78	0.66	-15.21
Average specs in semolina (units)	104	82	-21.15

- **Efficiency has increased by 17.65%.**
- **Ash and specs decreased considerably.**

NEW ROLLER MILL

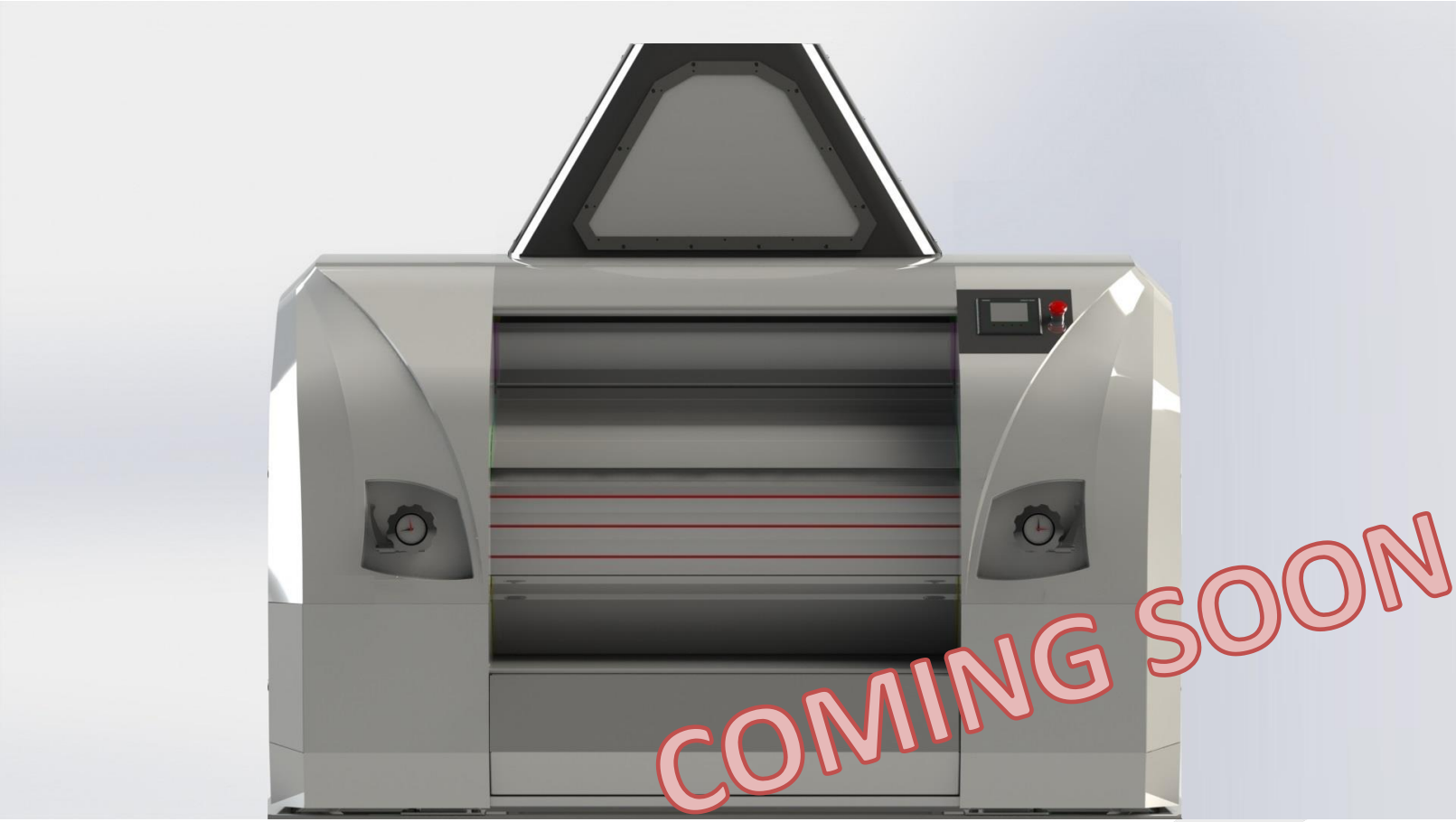

NEW PLANSIFTER
(Aluminum Chassis)

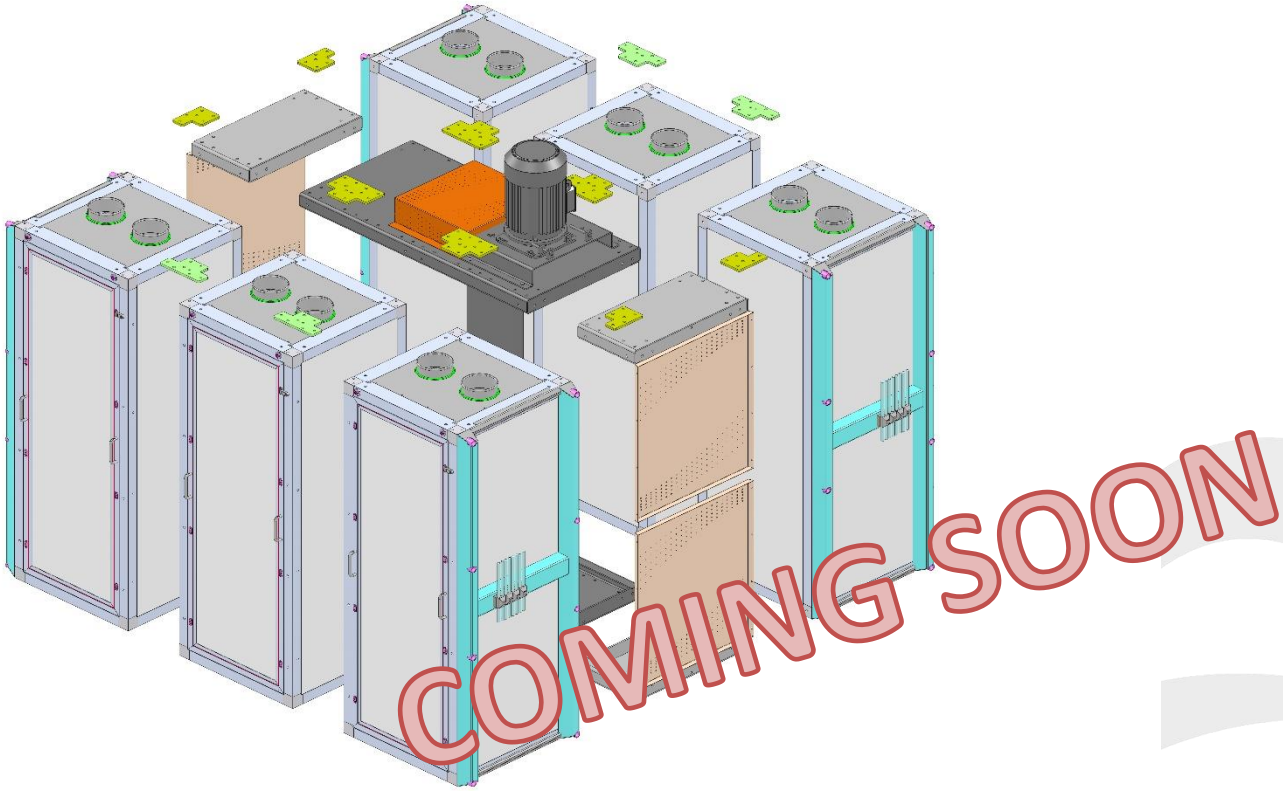

imas
INTEGRATED MACHINERY SYSTEMS

imas Milleral
INTEGRATED MILLING SYSTEMS

THANK YOU FOR LISTENING

FOR MORE DETAILS VISIT US AT TABLE 8